# SPECIFICATION

Revision: 0.0

**WKS35HV031-WCT**

This module uses ROHS material

This specification may change without prior notice in order to improve performance or quality. Please contact WKS R&D department for updated specification and product status before design for this product or release of this order.

| WRITTEN BY | CHECKED BY | APPROVED BY |
|---|---|---|
| Monica | Ljune | Jason |

# REVISION RECORD

| REV NO. | REV DATE | CONTENTS | REMARKS |
|---|---|---|---|
| 0.0 | 2025-5-29 | First release | Preliminary |
| | | | |
| | | | |
| | | | |
| | | | |
| | | | |
| | | | |
| | | | |
| | | | |
| | | | |
| | | | |
| | | | |
| | | | |
| | | | |
| | | | |
| | | | |
| | | | |
| | | | |

# CONTENTS

1、GENERAL INFORMATION

2、EXTERNAL DIMENSIONS

3、ABSOLUTE MAXIMUM RATINGS

4、ELECTRICAL CHARACTERISTICS

5、BACKLIGHT CHARACTERISTICS

6、CTP CHARACTERISTICS

7、ELECTRO-OPTICAL CHARACTERISTICS

8、INTERFACE DESCRIPTION

9、INPUT TIMING

10、RELIABILITY TEST CONDITIONS

11、INSPECTION CRITERION

# 1、GENERAL INFORMATION

| Item of general information | Contents | | Unit |
|---|---|---|---|
| LCD Display Size (Diagonal) | 3.5 | | inch |
| Module Structure | LCD + TOUCH + PCBA | | - |
| LCD Display Type | TFT/TRANSMISSIVE | | - |
| LCD Display Mode | Normally Black | | - |
| Viewing Direction | ALL VIEW | | o’clock |
| Module size (W×H×T) | 56.41×97.89×6.53 | | mm |
| Active area (W×H) | 48.96×73.44 | | mm |
| Number of pixels (Resolution) | 320(RGB)×480 | | pixel |
| Pixel pitch (W×H) | 0.153×0.153 | | mm |
| Color Pixel Arrangement | RGB Stripe | | - |
| Module Interface Type | LCD | SPI-4line interface | - |
| | TOUCH | I2C interface | - |
| Module Input voltage | 5.0 | | V |
| Module Power consumption | - | | mW |
| Color Numbers | 65K | | - |
| Backlight Type | White LED | | - |

# 2、EXTERNAL DIMENSIONS

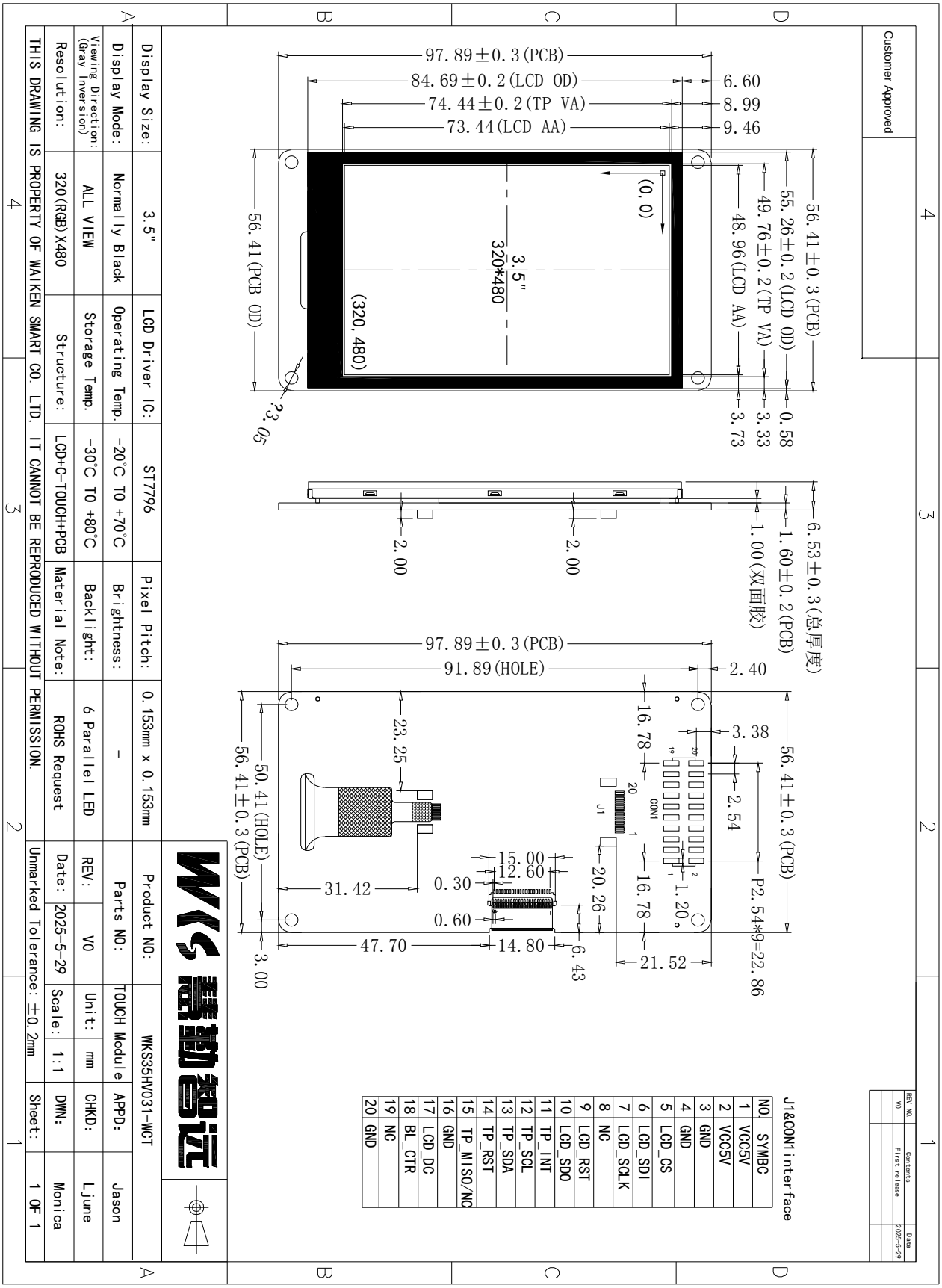

## 3、ABSOLUTE MAXIMUM RATINGS

| Parameter of absolute maximum ratings | Symbol | Min | Max | Unit |
|---|---|---|---|---|
| Operating temperature | Top | -20 | 70 | ℃ |
| Storage temperature | Tst | -30 | 80 | ℃ |
| Humidity | RH | - | 90%(Max 60℃) | RH |

Note: Absolute maximum ratings means the product can withstand short-term, not more than 120 hours. If it is a long time to withstand these conditions, the life time would be shorter.

## 4、ELECTRICAL CHARACTERISTICS(DC CHARACTERISTICS)

| Parameter of DC characteristics | Symbol | Min. | Typ. | Max. | Unit |
|---|---|---|---|---|---|
| PCB operating voltage | VCC | - | 5.0 | - | V |
| Input voltage ‘H’ level | VIH | 0.7*3.3V | - | 3.3V | V |
| Input voltage ‘L’ level | VIL | VSS | - | 0.2*3.3V | V |
| Output voltage ‘H’ level | VOH | 0.8*3.3V | - | 3.3V | V |
| Output voltage ‘L’ level | VOL | VSS | - | 0.2*3.3V | V |

## 5、BACKLIGHT CHARACTERISTICS

| Item of backlight characteristics | Symbol | Min. | Typ. | Max. | Unit | Remark |
|---|---|---|---|---|---|---|
| Forward voltage | Vf | 2.9 | 3.1 | 3.3 | V | Note1 |
| Forward Current | If | - | 90 | - | mA | - |
| Number of LED | - | - | 6 | - | Piece | - |
| LED Connection mode | P/S | - | Parallel | - | - | - |
| Lifetime of LED | - | - | 20000 | - | hour | Note2 |

Note1: The LED Supply Voltage is defined by the number of LED at Ta=25℃ and If=90mA.

Note2: The LED lifetime define as the estimated time to 50% degradation of initial luminous. The LED lifetime could be decreased if operating If is larger than 90mA.

## 6、CTP CHARACTERISTICS

| Item of CTP characteristics | Specification | Unit | Remark |
|---|---|---|---|
| Panel Type | Cover Lens + ITO Glass | - | - |
| Resolution | 320 × 480 | pixel | - |
| Surface Hardness | ≥6H | - | - |
| Transparency | ＞85% | - | - |
| Interface Type | I2C | - | - |
| Support Points | 5(Max) | - | - |

# 7、ELECTRO-OPTICAL CHARACTERISTICS

| Item of electro-optical characteristics | | Symbol | Condition | Min. | Typ. | Max. | Unit | Remark | Note |
|---|---|---|---|---|---|---|---|---|---|
| Response time | | Tr+Tf | θ=0 ∅=0 Ta=25℃ | - | 25 | 3 | ms | FIG 1. | 4 |
| Contrast Ratio | | CR | | - | 500 | - | - | FIG 2. | 1 |
| Luminance uniformity | | δWHITE | | 80 | - | - | % | FIG 2. | 3 |
| Surface Luminance | | Lv | | - | 350 | - | cd/m2 | FIG 2. | 2 |
| CIE (x, y) chromaticity | White | White x | θ=0 ∅=0 Ta=25℃ | - | 0.304 | - | - | FIG 2. | 5 |
| | | White y | | - | 0.332 | - | | | |
| | Red | Red x | | - | 0.655 | - | | | |
| | | Red y | | - | 0.317 | - | | | |
| | Green | Green x | | - | 0.262 | - | | | |
| | | Green y | | - | 0.568 | - | | | |
| | Blue | Blue x | | - | 0.137 | - | | | |
| | | Blue y | | - | 0.085 | - | | | |
| Viewing angle range | ∅=90(12 o'clock) | | CR ≥ 10 | 80 | 85 | - | deg | FIG 3. | 6 |
| | ∅=270(6 o'clock) | | | 80 | 85 | - | deg | | |
| | ∅=0(3 o'clock) | | | 80 | 85 | - | deg | | |
| | ∅=180(9 o'clock) | | | 80 | 85 | - | deg | | |
| NTSC ratio | - | | - | 65 | 70 | - | % | - | - |

**Note 1.** Contrast Ratio(CR) is defined mathematically by the following formula. For more information see FIG 2.

$$\text{Contrast Ratio(CR)} = \frac{\text{Average Surface Luminance with all white pixels(P1, P2, P3, P4, P5, P6, P7, P8, P9)}}{\text{Average Surface Luminance with all black pixels(P1, P2, P3, P4, P5, P6, P7, P8, P9)}}$$

**Note 2.** Surface luminance is the LCD surface from the surface with all pixels displaying white. For more information see FIG 2.

Lv=Average Surface Luminance with all white pixels (P1,P2,P3,P4,P5,P6,P7,P8,P9)

**Note 3.** The uniformity in surface luminance（δWHITE）is determined by measuring luminance at each test position 1 through 9, and then dividing the maximum luminance of

9points luminance by minimum luminance of 9 points luminance. For more information see FIG 2.

$$\delta WHITE = \frac{Minimum\ Surface\ Luminance\ with\ all\ white\ pixels\ (P1, P2, P3, P4, P5, P6, P7, P8, P9)}{Maximum\ Surface\ Luminance\ with\ all\ white\ pixels\ (P1, P2, P3, P4, P5, P6, P7, P8, P9)}$$

**Note 4.** Response time is the time required for the display to transition from White to black(Rise Time, Tr) and from black to white(Decay Time, Tf). For additional information see FIG 1.

**Note 5.** CIE (x, y) chromaticity ,The x,y value is determined by screen active area position 5. For more information see FIG 2.

**Note 6.** Viewing angle is the angle at which the contrast ratio is greater than a specific value. For TFT module, the specific value of contrast ratio is 10.The angles are determined for the horizontal or x axis and the vertical or y axis with respect to the z axis which is normal to the LCD surface. For more information see FIG 3.

**Note 7.** For Viewing angle and response time testing, the testing data is base on Autronic-Melchers's ConoScope. Series Instruments. For contrast ratio, Surface Luminance, Luminance uniformity and CIE， the testing data is base on BM-7 photo detector.

**Note 8.** For TN type TFT transmissive module, Gray scale reverse occurs in the direction of panel viewing angle.

**FIG.1. The definition of Response Time**

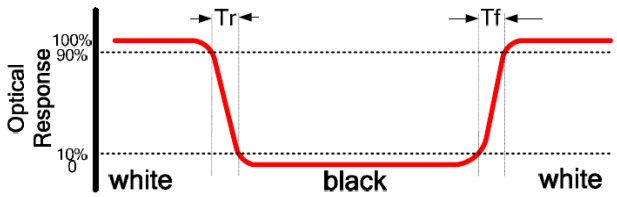


**FIG.2. Measuring method for Contrast ratio, surface luminance, Luminance**

## uniformity, CIE (x , y) chromaticity

A : H/6 ;
B : V/6 ;
H,V : Active Area(AA) size
Measurement instrument: BM-7; Light spot size=5mm, 350mm distance from the LCD surface to detector lens.

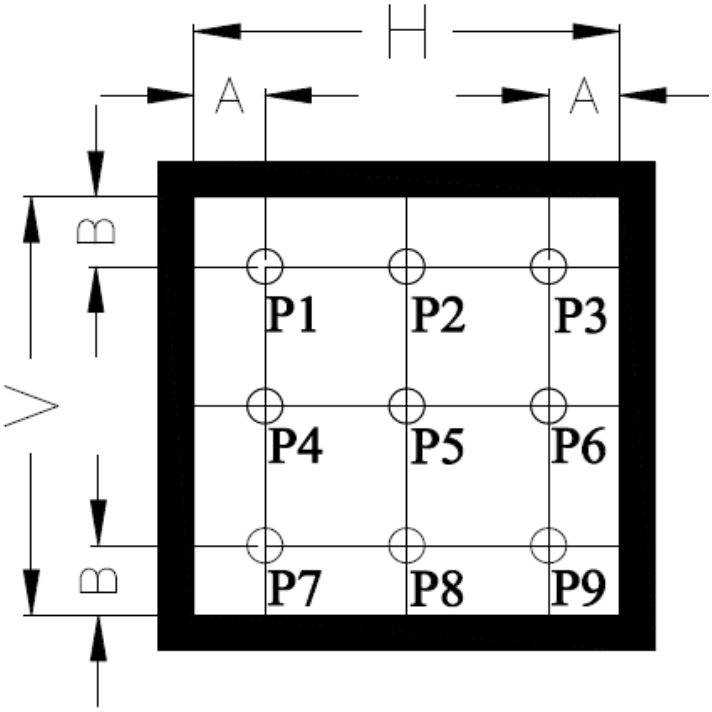


## FIG.3. The definition of viewing angle

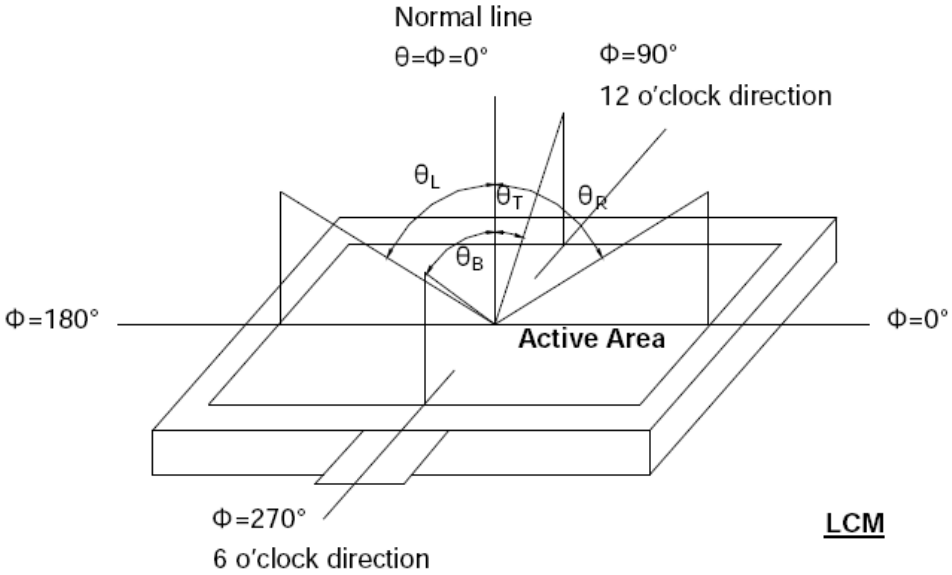

# 8、INTERFACE DESCRIPTION

| NO. | Symbol | I/O | DESCRIPTION |
|---|---|---|---|
| 1~2 | VCC5V | Power supply | Module Power supply (5V Typ.) |
| 3~4 | GND | Power supply | Power ground |
| 5 | LCD_CS | I | Chip Select pin(CSX) |
| 6 | LCD_SDI | I | Data input pin 4-wire SPI I/F(SDA) |
| 7 | LCD_SCLK | I | Clock of 4-wire serial I/F(SCL) |
| 8 | NC | - | No connection |
| 9 | LCD_RST | I | This is an active low Reset pin for LCD |
| 10 | LCD_SDO | O | Data output pin of 4-wire SPI I/F(DOUT) |
| 11 | TP_INT | O | CTP External interrupt to the host |
| 12 | TP_SCL | I | CTP I2C clock input |
| 13 | TP_SDA | I/O | CTP I2C data input and output |
| 14 | TP_RST | I | CTP external reset signal, Low is active |
| 15 | TP_MISO/NC | - | No connection |
| 16 | GND | Power supply | Power ground |
| 17 | LCD_DC | - | Data/Command select LCD(D/CX) |
| 18 | BL_CTR | - | Backlight control |
| 19 | NC | - | No connection |
| 20 | GND | Power supply | Power ground |

# 9、INPUT TIMING

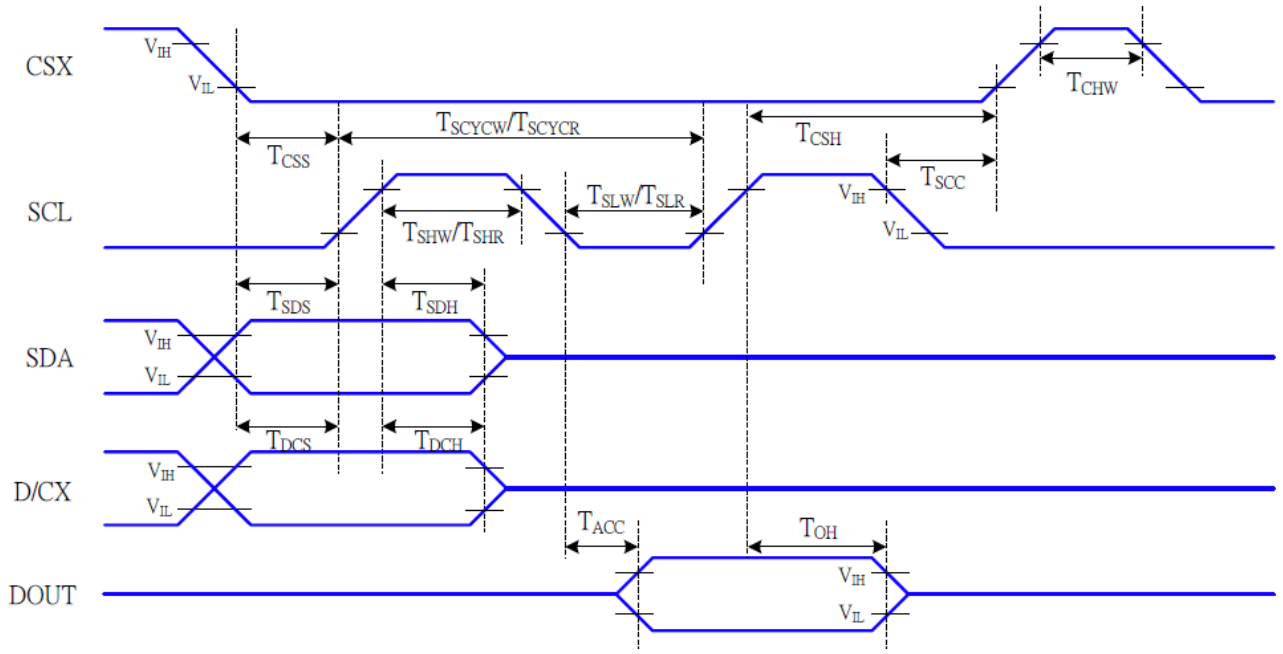


| Signal | Symbol | Parameter | MIN | MAX | Unit | Description |
|---|---|---|---|---|---|---|
| CSX | $T_{CSS}$ | Chip select setup time (write) | 15 | | ns | |
| | $T_{CSH}$ | Chip select hold time (write) | 15 | | ns | |
| | $T_{CSS}$ | Chip select setup time (read) | 60 | | ns | |
| | $T_{SCC}$ | Chip select hold time (read) | 65 | | ns | |
| | $T_{CHW}$ | Chip select "H" pulse width | 40 | | ns | |
| SCL | $T_{SCYCW}$ | Serial clock cycle (Write) | 66 | | ns | -write command & data ram |
| | $T_{SHW}$ | SCL "H" pulse width (Write) | 15 | | ns | |
| | $T_{SLW}$ | SCL "L" pulse width (Write) | 15 | | ns | |
| | $T_{SCYCR}$ | Serial clock cycle (Read) | 150 | | ns | -read command & data ram |
| | $T_{SHR}$ | SCL "H" pulse width (Read) | 60 | | ns | |
| | $T_{SLR}$ | SCL "L" pulse width (Read) | 60 | | ns | |
| D/CX | $T_{DCS}$ | D/CX setup time | 10 | | ns | |
| | $T_{DCH}$ | D/CX hold time | 10 | | ns | |
| SDA (DIN) | $T_{SDS}$ | Data setup time | 10 | | ns | |
| | $T_{SDH}$ | Data hold time | 10 | | ns | |
| DOUT | $T_{ACC}$ | Access time | 10 | 50 | ns | For maximum CL=30pF |
| | $T_{OH}$ | Output disable time | 15 | 50 | ns | For minimum CL=8pF |

# 10、RELIABILITY TEST CONDITIONS

| No. | Test Item | Test Condition |
|---|---|---|
| 1 | High Temperature Storage | 80℃/120 hours |
| 2 | Low Temperature Storage | -30℃/120 hours |
| 3 | High Temperature Operating | 70℃/120 hours |
| 4 | Low Temperature Operating | 20℃/120 hours |
| 5 | Temperature Cycle Storage | -20℃(30min.)~25(5min.)~70℃(30min.)×10cycles |

**A、Inspection after test:**

Inspection after 2~4 hours storage at room temperature, the sample shall be free from defects:

- Air bubble in the LCD;
- Sealleak;
- Non-display;
- Missing segments;
- Glass crack;
- Current is twice higher than initial value.

**B、Remark:**

- The test samples should be applied to only one test item.
- Sample size for each test item is 5~10pcs.
- Failure Judgment Criterion: Basic Specification, Electrical Characteristic, Mechanical Characteristic, Optical Characteristic.

# 11、INSPECTION CRITERION

This specification is made to be used as the standard of acceptance/rejection criteria for TFT-LCD/IPS TFT-LCD module product, and this specification is applicable only in the case that the size of module equal to or exceed than 3.5 inch.

## 11.1 Sample plan

Sampling plan according to GB/T2828.1-2003/ISO 2859-1：1999 and ANSI/ASQC Z1.4-1993,normal level 2 and based on:

Major defect: AQL 0.65

Minor defect: AQL 1.5

## 11.2 Inspection condition

Viewing distance for cosmetic inspection is about 30cm with bare eyes, and under an environment of 20~40W light intensity, all directions for inspecting the sample should be within 45°against perpendicular line. (Normal temperature 20~25℃and normal humidity 60 ±15%RH )

## 11.3 Definition of Inspection Item.

### A、 Definition of inspection zone in LCD.

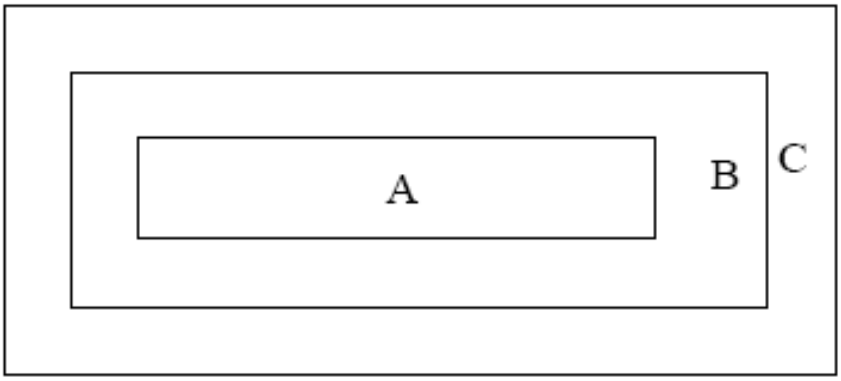


Zone A: character/Digit area

Zone B: viewing area except Zone A (Zone A + Zone B=minimum Viewing area)

Zone C: Outside viewing area (invisible area after assembly in customer's product)

Fig.1 Inspection zones in an LCD

Note: As a general rule, visual defects in Zone C are permissible, when it is no trouble for quality and assembly of customer's product.

**B、 Definition of some visual defect**

| | |
|---|---|
| Bright dot | Because of losing all or part function, bad pixel dots appear bright and the size is more than 50% of one dot in which LCD panel is displaying under black pattern. |
| Dark dot | Dots appear dark and unchanged in size in which LCD panel is displaying under pure red, green, blue picture, or pure whiter picture. |

## 11.4 Major Defect

| Item No. | Items to be inspected | Inspection standard | Classification of defects |
|---|---|---|---|
| 1 | Functional defects | 1) No display<br>2) Display abnormally<br>3) Missing vertical, horizontal segment<br>4) Short circuit<br>5) Excess power consumption<br>6)Backlight no lighting, flickering and abnormal lighting | major |
| 2 | Missing | Missing component | |
| 3 | Outline dimension | Overall outline dimension beyond the drawing is not allowed | |

## 11.5 Minor Defect

<table>
<tr><th>Item No.</th><th>Items to be inspected</th><th>Inspection standard</th><th>Classification of defects</th></tr>
<tr><td>1</td><td>Bright dot /dark dot defect</td><td>
<table>
<tr><th rowspan="3">Zone</th><th colspan="4">Acceptable Qty</th></tr>
<tr><th colspan="3">A+B</th><th rowspan="2">C</th></tr>
<tr><th>3.5～7”</th><th>7～10.1”</th><th>＞10.1”</th></tr>
<tr><td>Bright pixel dot</td><td>1</td><td>2</td><td>3</td><td rowspan="5">Acceptable</td></tr>
<tr><td>Dark pixel dot</td><td>4</td><td>4</td><td>4</td></tr>
<tr><td>2bright dots adjacent</td><td>0</td><td>0</td><td>0</td></tr>
<tr><td>2dark dots adjacent</td><td>0</td><td>0</td><td>0</td></tr>
<tr><td>Total bright and dark dots</td><td>5</td><td>6</td><td>7</td></tr>
</table>
Note: Minimum distance between defective dots is more than 5mm; Pixel dots’ function is normal, but bright dots caused by foreign material and other reasons are judged by the dot defect of 5.2.
</td><td>Minor</td></tr>
<tr><td>2</td><td>Dot defect<br> 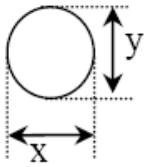 <br><br>Φ=(x+y) /2</td><td>
<table>
<tr><th rowspan="3">Zone<br>Size(mm)</th><th colspan="4">Acceptable Qty</th></tr>
<tr><th colspan="3">A+B</th><th rowspan="2">C</th></tr>
<tr><th>3.5”～7”</th><th>7～10.1”</th><th>＞10.1”</th></tr>
<tr><td>Φ≤0.2</td><td>Acceptable</td><td>Acceptable</td><td>Acceptable</td><td rowspan="3">Acceptable</td></tr>
<tr><td>0.2＜Φ≤0.5</td><td>4</td><td>5</td><td>6</td></tr>
<tr><td>Φ＞0.5</td><td>0</td><td>0</td><td>0</td></tr>
</table>
Note:<br>1. Minimum distance between defective dots is more than 5 mm;<br>2. The quantity of defect is zero in operating condition.
</td><td>Minor</td></tr>
<tr><td>3</td><td>Linear defect</td><td>
<table>
<tr><th rowspan="3" colspan="2">Zone<br>Size (mm)</th><th colspan="4">Acceptable Qty</th></tr>
<tr><th colspan="3">A+B</th><th rowspan="2">C</th></tr>
<tr><th>Length</th><th>Width</th><th>3.5”～7”</th><th>7～10.1”</th><th>＞10.1”</th></tr>
<tr><td>Ignore</td><td>W≤0.05</td><td>Acceptable</td><td>Acceptable</td><td>Acceptable</td><td rowspan="3">Acceptable</td></tr>
<tr><td>L≤5.0</td><td>0.05＜W≤0.1</td><td>4</td><td>5</td><td>6</td></tr>
<tr><td>L＞5.0</td><td>W＞0.1</td><td>0</td><td>0</td><td>0</td></tr>
</table>
</td><td>Minor</td></tr>
</table>

<table>
<tr><td rowspan="2">4</td><td rowspan="2">Polarizer defect</td><td>
5.4.1 Polarizer Position<br>
( i) Shifting in position should not exceed the glass outline dimension.<br>
( ii ) Incomplete covering of the viewing area due to shifting is not allowed.<br>
5.4.2 Dirt on polarizer<br>
Dirt which can be wiped easily should be acceptable.<br>
5.4.3 Polarizer Dent & Air bubble
<table>
<tr><td rowspan="3">Zone<br>Size(mm)</td><td colspan="4">Acceptable Qty</td></tr>
<tr><td colspan="3">A+B</td><td rowspan="2">C</td></tr>
<tr><td>3.5”～7”</td><td>7～10.1”</td><td>＞10.1”</td></tr>
<tr><td>Φ≤0.2</td><td>Acceptable</td><td>Acceptable</td><td>Acceptable</td><td rowspan="3">Acceptable</td></tr>
<tr><td>0.2＜Φ≤0.5</td><td>4</td><td>5</td><td>6</td></tr>
<tr><td>Φ＞0.5</td><td>0</td><td>0</td><td>0</td></tr>
</table>
5.4.4 Polarizer scratch<br>
(i) If the polarizer scratch can be seen after cover assembling or in the operating condition, judge by the linear defect of 5.3.<br>
( ii )If the polarizer scratch can be seen only in non-operating condition or some special angle, judge by the following:
<table>
<tr><td colspan="2" rowspan="3">Zone<br>Size (mm)</td><td colspan="4">Acceptable Qty</td></tr>
<tr><td colspan="3">A+B</td><td rowspan="2">C</td></tr>
<tr><td>Length</td><td>Width</td><td>3.5”～7”</td><td>7～10.1”</td><td>＞10.1”</td></tr>
<tr><td>Ignore</td><td>W≤0.05</td><td>Acceptable</td><td>Acceptable</td><td>Acceptable</td><td rowspan="3">Acceptable</td></tr>
<tr><td>1.0＜L≤5.0</td><td>0.05＜W≤0.20</td><td>4</td><td>5</td><td>6</td></tr>
<tr><td>L＞5.0</td><td>W＞0.2</td><td>0</td><td>0</td><td>0</td></tr>
</table>
</td><td rowspan="2">Minor</td></tr>
<tr><td>5</td><td>MURA</td><td>Using 3% ND filter, it’s NG if it can be seen in R,G,B picture.</td><td rowspan="2">Minor</td></tr>
<tr><td></td><td>White/Black dot（MURA）</td><td>Visible under：ND3%；D≦0.15mm, Acceptable；<br>0.15mm<D≦0.5mm, N≦4；D>0.5mm, Not allowable.</td></tr>
</table>

<table>
<tr><td rowspan="3">6</td><td rowspan="3">Glass defect</td><td>(i) Crack<br>Cracks are not allowed.<br> 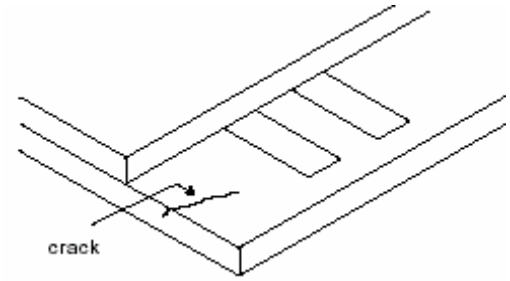 <br></td><td>Minor</td></tr>
<tr><td>(ii) TFT chips on corner<br> 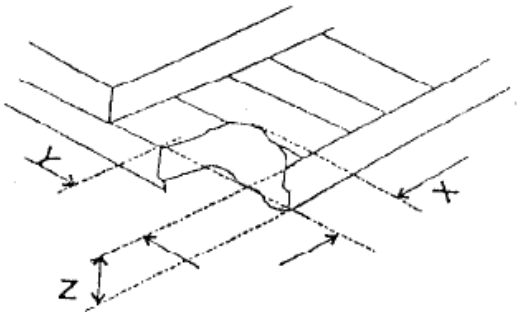 <br><br><table><tr><th>X</th><th>Y</th><th>Z</th><th>Acceptable</th></tr><tr><td>≤3.0</td><td>≤3.0</td><td>Not more than the thickness of glass</td><td>N≤3</td></tr></table>Chips on the corner of terminal shall not be allowed to extend into the ITO pad or expose perimeter seal.</td><td>Minor</td></tr>
<tr><td>(iii) Usual surface crack<br> 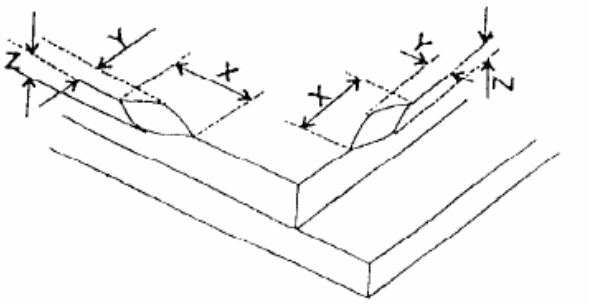 <br><br><table><tr><th>X</th><th>Y</th><th>Z</th><th>Acceptable</th></tr><tr><td>≤1.5</td><td>≤1.5</td><td>Not more than the thickness of glass</td><td>N≤4</td></tr></table>It is only applicable to the upper glass of LCD.</td><td>Minor</td></tr>
</table>

## 11.6 Module Cosmetic Criteria

| Item No. | Items to be inspected | Inspection Standard | Classification of defects |
|---|---|---|---|
| 1 | Difference in Spec. | Not allowable | Major |
| 2 | Pattern peeling | No substrate pattern peeling and floating | Major |
| 3 | Soldering defects | No soldering missing | Major |
| | | No soldering bridge | Major |
| | | No cold soldering | Minor |
| 4 | Resist flaw on PCB | Visible copper foil (Φ0.5 mm or more) on substrate pattern is not allowed | Minor |
| 5 | FPC gold finger | No dirt, breaking, oxidation lead to black | Major |
| 6 | Backlight plastic frame | No deformation, crack, breaking, backlight positioning column breaking, obvious nick. | Minor |
| 7 | Marking printing effect | No dark marking, incomplete, deformation lead to unable to judge | Minor |
| 8 | Accretion of metallic Foreign matter | No accretion of metallic foreign matter (Not exceed Φ0.2mm) | Minor |
| 9 | Stain | No stain to spoil cosmetic badly | Minor |
| 10 | Plate discoloring | No plate fading, rusting and discoloring | Minor |
| 11 | 1. Lead parts | a. Soldering side of PCB Solder to form a 'Filet' all around the lead. Solder should not hide the lead form perfectly. | Minor |
| | | b. Components side(In case of 'Through Hole PCB') Solder to reach the Components side of PCB. | Minor |
| | 2. Flat packages | Either 'Toe'(A) or 'Seal'(B)of the lead to be covered by "Filet". Lead form to be assume over Solder. 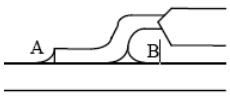  | Minor |
| | 3. Chips | (3/2) H ≥h ≥(1/2) H 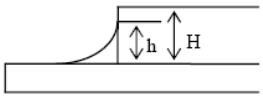  | Minor |
| | 4. Solder ball/Solder splash | a. The spacing between solder ball and the conductor or solder pad h ≥0.13 mm. The diameter of solder ball d≤0.15 mm. | Minor |
| | | b. The quantity of solder balls or solder splashes isn't beyond 5 in 600 mm2. | Minor |
| | | c. Solder balls/Solder splashes do not violate minimum electrical clearance. | Major |